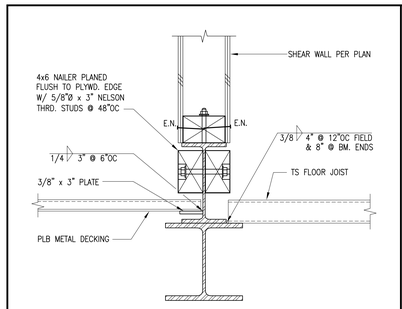

125-D500

500 COMPOSITE STEEL BEAM 1 1/2"=1'-0"

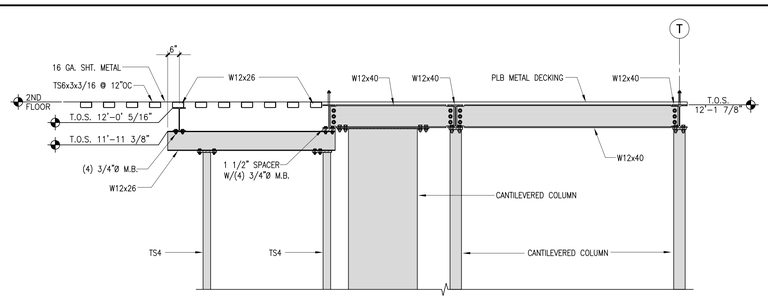

125-D501

501 2ND FLOOR BEAM CONNECTION 3/8"=1'-0"

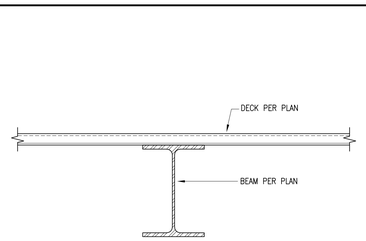

125-D502

502 2nd FLOOR DECK & BEAM 1 1/2"=1'-0"

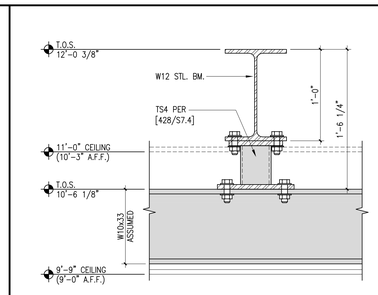

125-D503

503 STEEL CONNECTION 1 1/2"=1'-0"

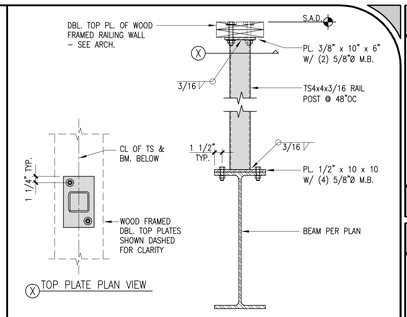

125-D505

505 RAILING TO STEEL BEAM 1"=1'-0"

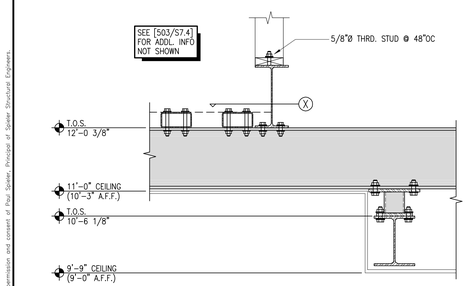

125-D504

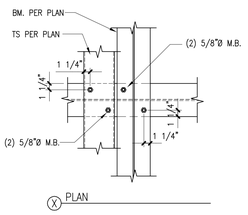

504 BEAM TO BEAM CONNECTION 1"=1'-0"

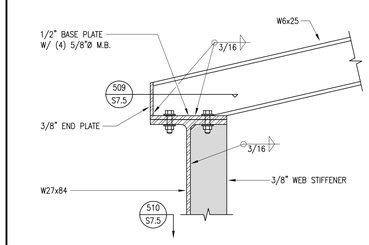

125-D506

506 BEAM TO BEAM CONNECTION 1 1/2"=1'-0"

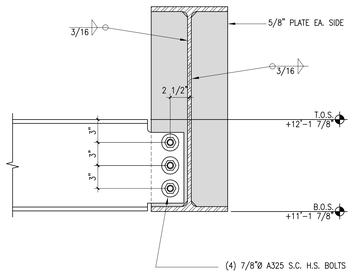

125-D507

507 BEAM TO BEAM CONNECTION 1 1/2"=1'-0"

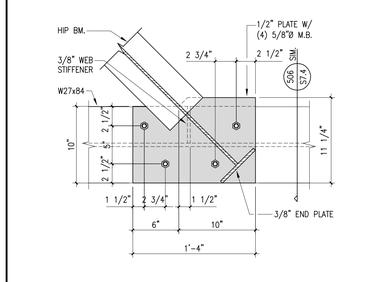

125-D508

508 BEAM TO BEAM CONNECTION 1 1/2"=1'-0"

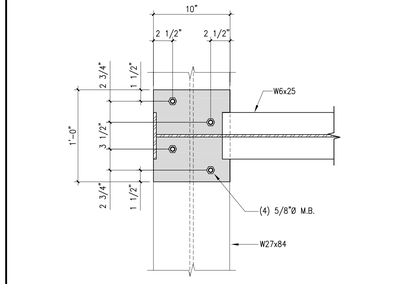

125-D509

509 BEAM TO BEAM CONNECTION 1 1/2"=1'-0"

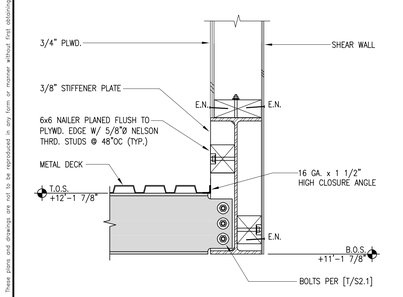

125-D510

510 BEAM TO BEAM CONNECTION 1"=1'-0"

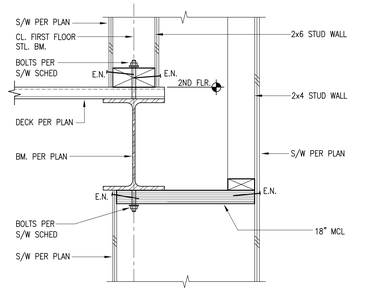

125-D511

511 EXT. WALL TO 2ND FLOOR 1 1/2"=1'-0"

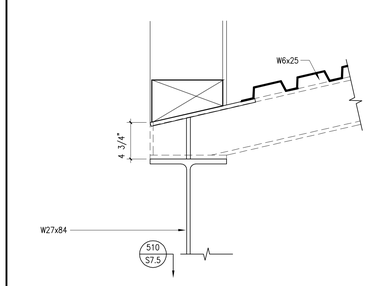

125-D512

512 BEAM TO BEAM CONNECTION 1 1/2"=1'-0"

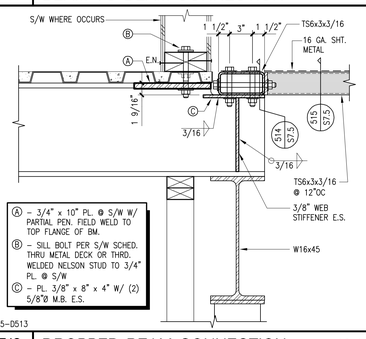

125-D513

513 DROPPED BEAM CONNECTION 1 1/2"=1'-0"

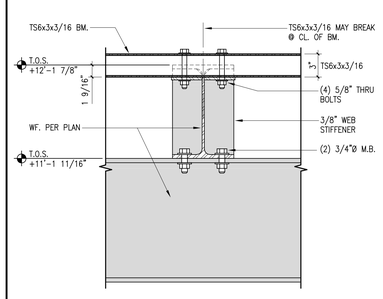

125-D514

514 BEAM TO BEAM CONNECTION 1 1/2"=1'-0"

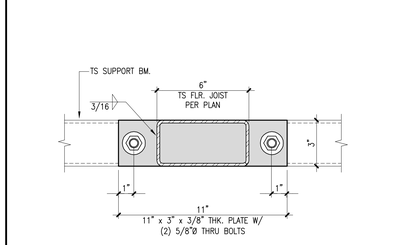

125-D515

515 TS FLOOR JOIST CONNECTION 3"=1'-0"

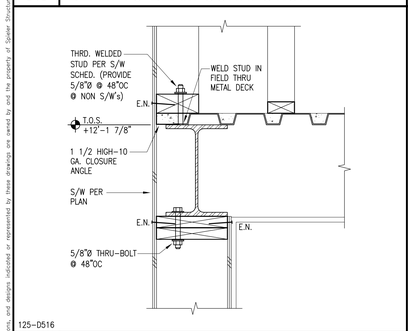

125-D516

516 2nd FLOOR DECK EDGE 1 1/2"=1'-0"

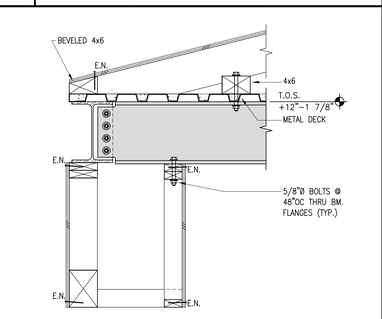

125-D517

517 LOW ROO ALL 1"=1'-0"

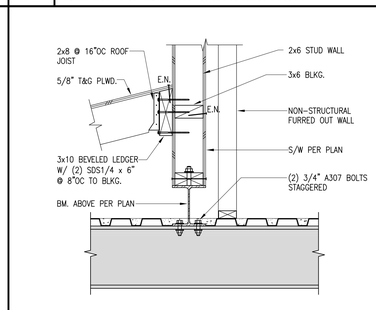

125-D518

518 LOW ROOF TO EXTERIOR WALL 1"=1'-0"

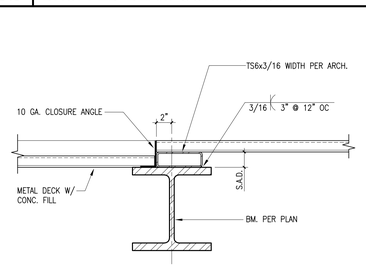

125-D519

519 EXTERIOR 2ND FLOOR DECK 1 1/2"=1'-0"

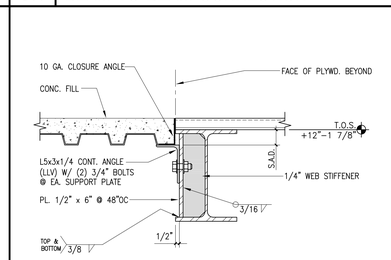

125-D520

520 EXTERIOR 2ND FLOOR DECK 1 1/2"=1'-0"

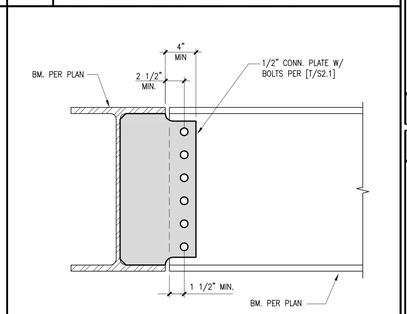

125-D526

526 BM. TO BM. CONNECTION 1 1/2"=1'-0"

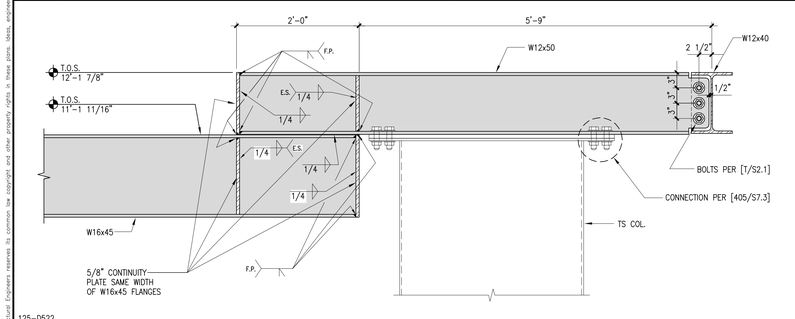

125-D522

522 OFFSET BEAM TO TS CONNECTION 1"=1'-0"

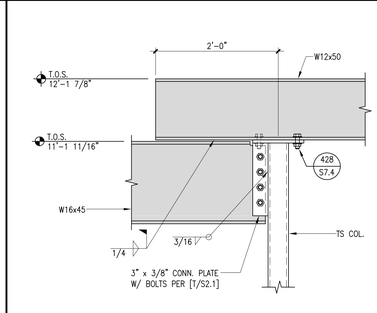

125-D523

523 BEAM TO DROPPED BEAM 1"=1'-0"

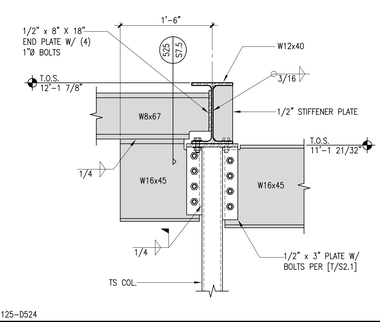

125-D524

524 BEAM TO DROPPED BEAM 1"=1'-0"

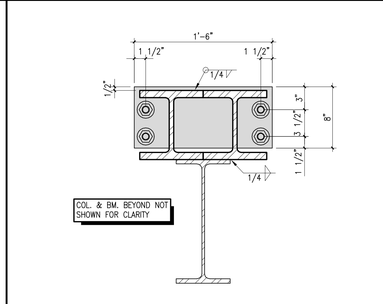

125-D525

525 2ND FLOOR DBL. BM. CONN. 1 1/2"=1'-0"

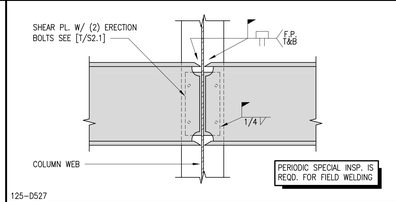

125-D527

527 MOMENT CONNECTION THRU COL. 1 1/2"=1'-0"

Spiel Engineers Inc. Copyright and other property rights in these plans, notes, specifications, calculations, designs, including electronic or represented by these drawings are owned by and the property of Spiel Engineers Inc. These plans and drawings are not to be reproduced in any form or manner without first obtaining the express written permission and consent of Paul Spiel Engineers Inc.

SPIEL ENGINEERS STRUCTURAL
629 STATE STREET
SUITE 203
SANTA BARBARA
CALIFORNIA 93101
PH: (805) 568-1750
FX: (805) 568-1743
spielengineers.com

SSE JOB NO.: 01025
DRAWN BY: TMC GMc
CHECKED BY: PAS

7	REVISIONS TO FORMAT	05/07/03
6	PLANCHECK RESPONSE	06/11/02
5	H.O. INFO & STL. DM. PLAN	09/25/02
4	RFI MBO13, 10, 11 & 12	09/11/02
3	1ST FLOOR STEEL FRAMING SUBMITTAL	10/09/02
2	PERMIT REVISION	10/14/02
1	MBO RFI'S, MISC. STRUCTURAL REVISIONS	11/17/02
0	PLANCHECK CORRECTIONS	04/10/03
0A	PLANCHECK CORRECTIONS	07/15/03
0B	PLANCHECK CORRECTIONS	02/25/04

SHEET CONTENTS
FLOOR FRAMING DETAILS & SECTIONS

MAIN BEACH RESIDENCE
1755 FERNALD POINT LANE
MONTECITO, CA

DATE 12/21/01

REGISTERED PROFESSIONAL ENGINEER PAUL K. SPIEL No. S3301 exp. 12/31/11 STRUCTURAL STATE OF CALIFORNIA

S7.5

SSE PLOT DATE: Tue, Mar. 13 '07 11:21am